Data Sheet : Deutsch DT

Description: 2 to 12 position, low cost, environmentally sealed connectors for inline applications. Stocked parts shown in table below, others available. Special crimp tooling is highly recommended, but not required.

CN-DTR-02-01 : 2 Position Housing Male	
CN-DTR-02-02 : 2 Position Housing Fem.	
CN-DTR-02-03 : 2 Position Wedge Lock(M)	
CN-DTR-02-04 : 2 Position Wedge Lock(F)	
CN-DTR-04-01 : 4 Position Housing Male	
CN-DTR-04-02 : 4 Position Housing Fem.	
CN-DTR-04-03 : 4 Position Wedge Lock(M)	
CN-DTR-04-04 : 4 Position Wedge Lock(F)	
CN-DTR-06-01 : 6 Position Housing Male	
CN-DTR-06-02 : 6 Position Housing Fem.	
CN-DTR-06-03 : 6 Position Wedge Lock(M)	
CN-DTR-06-04 : 6 Position Wedge Lock(F)	CN-DTR-12-01 : 12 Position Housing Male
CN-DTR-08-01 : 8 Position Housing Male	CN-DTR-12-03 : 12 Position Wedge Lock(M)
CN-DTR-08-02 : 8 Position Housing Fem.	CN-DTR-12-04 : 12 Position Wedge Lock(F)
CN-DTR-08-03 : 8 Position Wedge Lock(M)	CN-DTR-TMP : Pin Terminal
CN-DTR-08-04 : 8 Position Wedge Lock(F)	CN-DTR-TMS : Socket Terminal
CN-DTR-12-01 : 12 Position Housing Male	

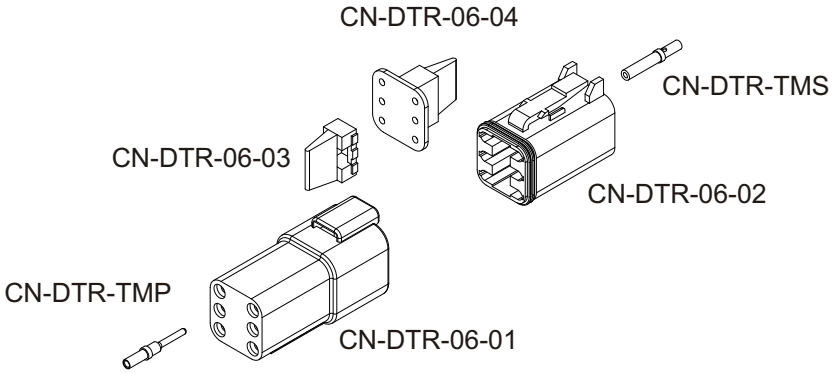

Mechanical:	Min.	Typ.	Max	Units	Comments
Material					
Seals		Silicone Rubber			
Terminals		Nickel Plated Copper			
Housings		Thermoplastic			

Electrical:	Min.	Typ.	Max	Units	Comments
Wire Size	20		14	AWG	
Connector Positions	2		12	Positions	2, 3, 4, 6, 8, 10, 12 Position Available
Operating Voltage			24	VDC	
Current Capacity			13	A	

Environmental:	Min.	Typ.	Max	Units	Comments
Operating Temperature	-40		125	Deg. C	
IP Rating		67		IP	

#10 953 Laval Cr. Kamloops BC V2C 5P4
800 Fifth Ave. #101-507 Seattle WA 98104
Ph. (877) 377-1117 Fax (877) 377-4036
www.controlgrips.com